MODEL NO. 12 17 FT 16000 - 13

PART NO. 4261730

DATE 15-01-2003

T16000

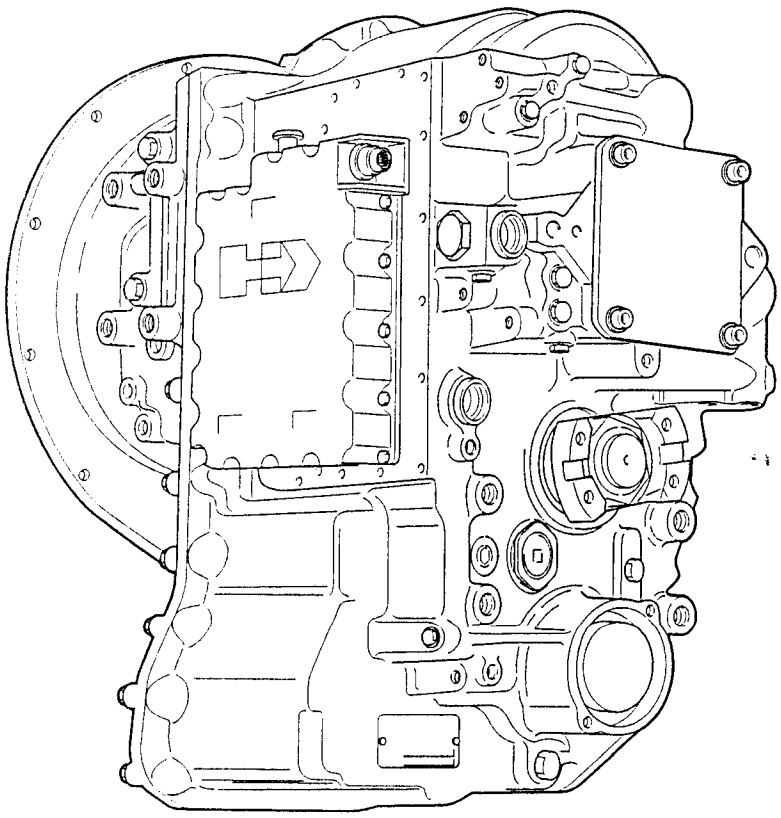

T16000

CONVERTER HOUSING GROUP

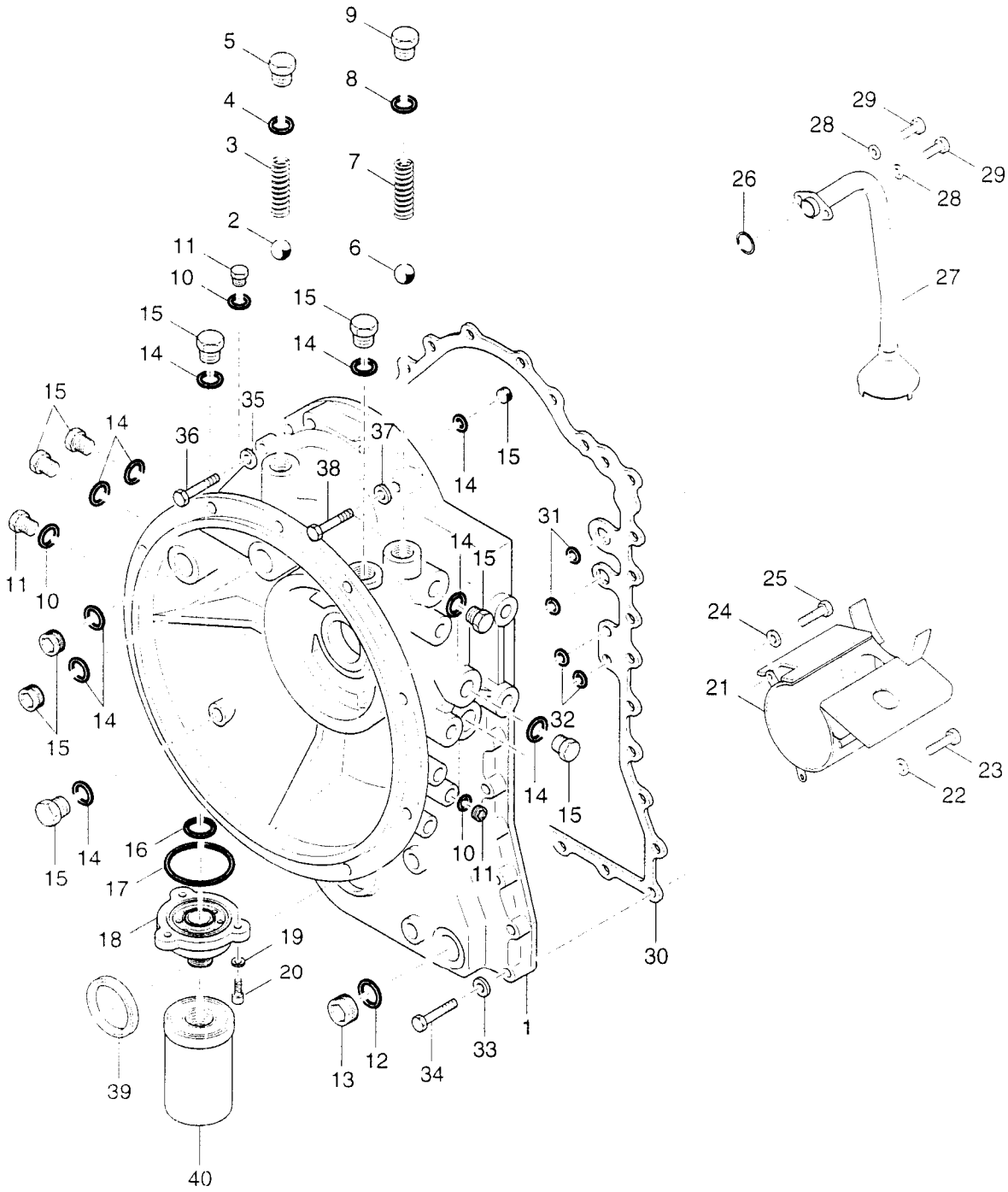

T16000

CONVERTER HOUSING GROUP

Item	Qty	Part Number	%	Description
1	1	4203970	E	Converter Housing Assembly
2	1	10J24		Ball
3	1	4204243		By – pass Spring
4	1	76K119		Plug "O" Ring – Part Of Item 5
5	1	4204244		Plug – Including Item 4
6	1	19JM250		Ball
7	1	4203857		Safety Valve Spring
8	1	76K123		Plug "O" Ring – Part Of Item 9
9	1	4203848		Plug – Including Item 8
10	3	76K11		Plug "O" Ring – Part Of Item 11
11	3	4203846		Plug – Including Item 10
12				Not Used On This Model
13				Not Used On This Model
14	10	76K116		Plug "O" Ring – Part Of Item 15
15	10	4203847		Plug – Including Item 14
16	1	4204245	B	Filter Adaptor "O" Ring
17	1	25K030228	B	Filter Adaptor "O" Ring
18	1	4205241		Filter Adaptor
19	3	6EM100		Filter Adaptor Screw Lockwasher
20	3	1GM1025		Filter Adaptor Screw
21	1	4204313		Oil Baffle
22	2	6EM100		Oil Baffle Mounting Screw Lockwasher
23	2	1GM1016		Oil Baffle Mounting Screw
24	1	6EM100		Oil Baffle Mounting Screw Lockwasher
25	1	1CM1016		Oil Baffle Mounting Screw
26	1	76K218	B	Suction Tube "O" Ring
27	1	4204237		Suction Tube Assembly
28	2	6EM100		Suction Tube Mounting Screw Lockwasher

N.S.S. – Not Sold Separately
% - Part Stock Recommendation

Item	Qty	Part Number	%	Description
29	2	1GM1016		Suction Tube Mounting Screw
30	1	4203901	B	Converter Housing To Transmission Case Gasket
31	2	60K020028	B	Converter Housing To Transmission Case "O" Ring
32	2	76K13	B	Converter Housing To Transmission Case "O" Ring
33	14	6EM100		Converter Hsg. To Transm. Case Screw Lockwasher
34	14	7CM1050		Converter Hsg. To Transm. Case Screw
35	2	6EM100		Converter Hsg. To Transm. Case Screw Lockwasher
36	2	7CM1030		Converter Hsg. To Transm. Case Screw
37	4	6EM100		Converter Hsg. To Transm. Case Screw Lockwasher
38	4	7CM1080		Converter Hsg. To Transm. Case Screw
39	1	4203860	B	Output Shaft Seal (Front)
40	1	4203691	B	Filter Assembly

N.S.S. – Not Sold Separately
% - Part Stock Recommendation

T16000

TRANSMISSION CASE GROUP

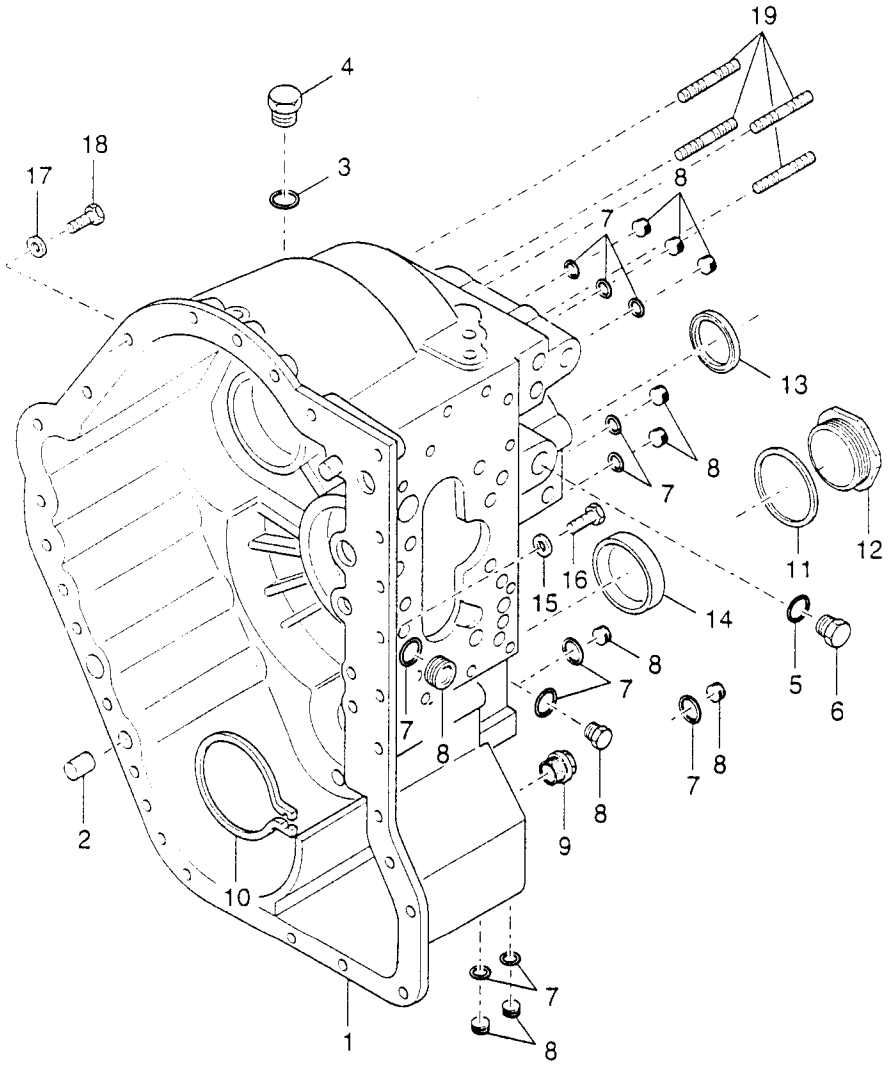

T16000

TRANSMISSION CASE GROUP

Item	Qty	Part Number	%	Description
1	1	4204281	E	Transmission Case Assembly
2	2	4203907		Transmission Case To Converter Housing Pin
3	1	76K116		Plug "O" Ring – Part Of Item 4
4	1	4203847		Plug – Including Item 3
5	1	76K210		Plug "O" Ring – Part Of Item 6
6	1	4203849		Plug – Including Item 5
7	11	76K11		Plug "O" Ring – Part Of Item 8
8	11	4203846		Plug – Including Item 7
9	1	4203567		Magnetic Drain Plug
10	1	234229		Output Shaft Rear Bearing Snap Ring
11	1	219373	B	Plug Gasket
12	1	4204249		Plug
13	1	4203860		Output Shaft Seal (Rear)
14	1	4204250		Output Shaft Bore Plug
15	5	6EM100		Converter Hsg. To Transm. Case Screw Lockwasher
16	5	7CM1030		Converter Hsg. To Transm. Case Screw
17	4	6EM100		Converter Hsg. To Transm. Case Screw Lockwasher
18	4	7CM1030		Converter Hsg. To Transm. Case Screw
19	4	4204248		Stud

N.S.S. – Not Sold Separately
% - Part Stock Recommendation

T16000

TORQUE CONVERTER GROUP

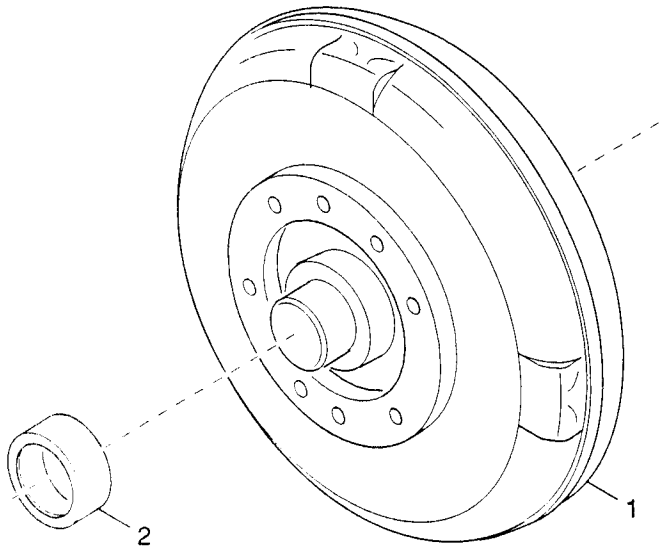

T16000

TORQUE CONVERTER GROUP

Item	Qty	Part Number	%	Description
1	1	4208179	E	Torque Converter & Bushing Assembly – Including Item 2
2	1	4203948		Torque Converter Pilot Bushing – Including In Item 1

N.S.S. – Not Sold Separately
% - Part Stock Recommendation

T16000

PUMP DRIVE GROUP

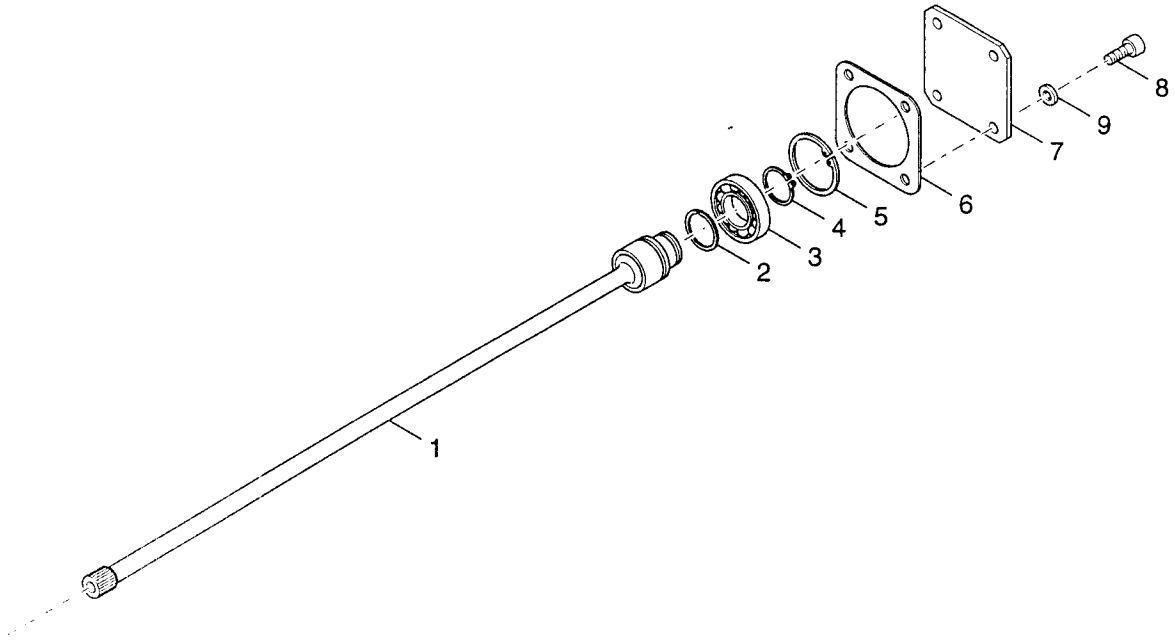

T16000

PUMP DRIVE GROUP

Item	Qty	Part Number	%	Description
1	1	4204235	E	Pump Drive Shaft
2	1	4203867	B	Piston Ring
3	1	230829	D	Pump Drive Shaft Bearing
4	1	5JM40		Pump Drive Shaft Bearing Snap Ring
5	1	7JM68		Pump Drive Shaft Bearing Retaining Ring
6	1	4201747	B	Pump Hole Cover Gasket
7	1	216355		Pump Hole Cover
8				Not Used On This Model
9	4	4E8		Pump Hole Cover Stud Nut Lockwasher
10	4	4204273		Pump Hole Cover Spacer Not Illustrated (for shipping)
11	4	62D8		Pump Hole Cover Stud Nut Not Illustrated (for shipping)
12	4	4204280		Aux. Pump Mounting Stud Nut Not Illustrated

N.S.S. – Not Sold Separately
% - Part Stock Recommendation

T16000

CHARGING PUMP GROUP

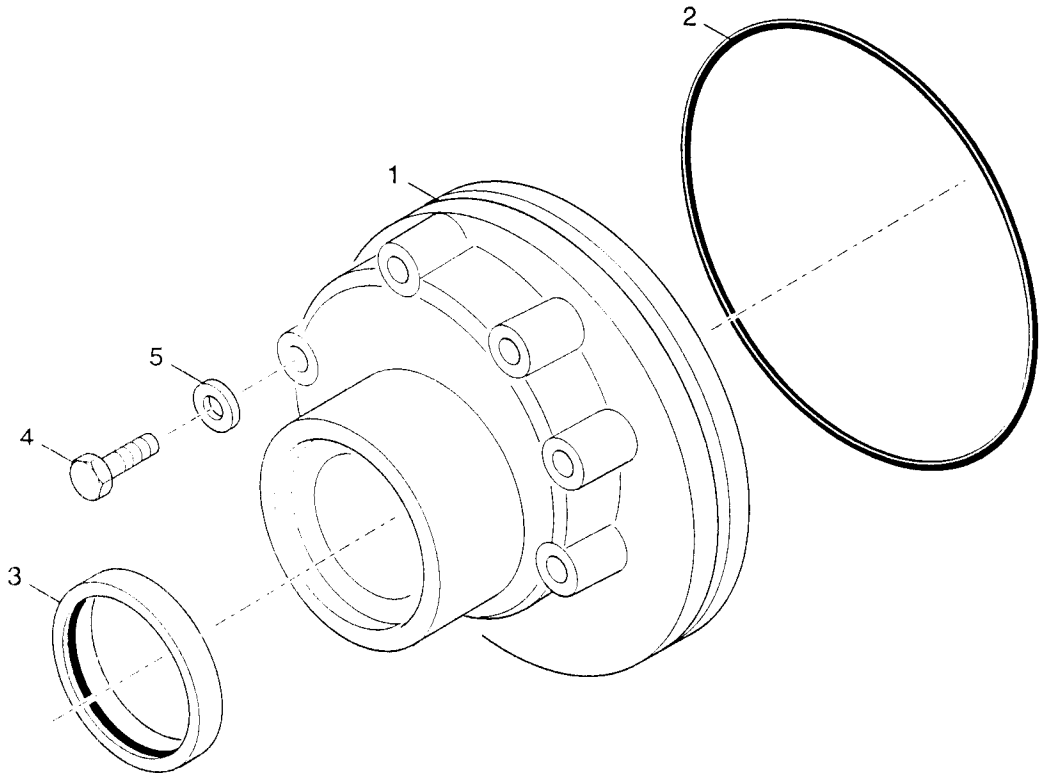

T16000

CHARGING PUMP GROUP

Item	Qty	Part Number	%	Description
1	1	4203850	D	Charging Pump Assembly – Including Items 2 And 3
2	1	4203844	B	Charging Pump "O" Ring
3	1	4204279	B	Charging Pump Oil Seal
4	6	1CM855		Charging Pump Mounting Screw
5	6	4203428		Charging Pump Mounting Screw Seal Washer

N.S.S. – Not Sold Separately
% - Part Stock Recommendation

T16000

INPUT SHAFT GROUP

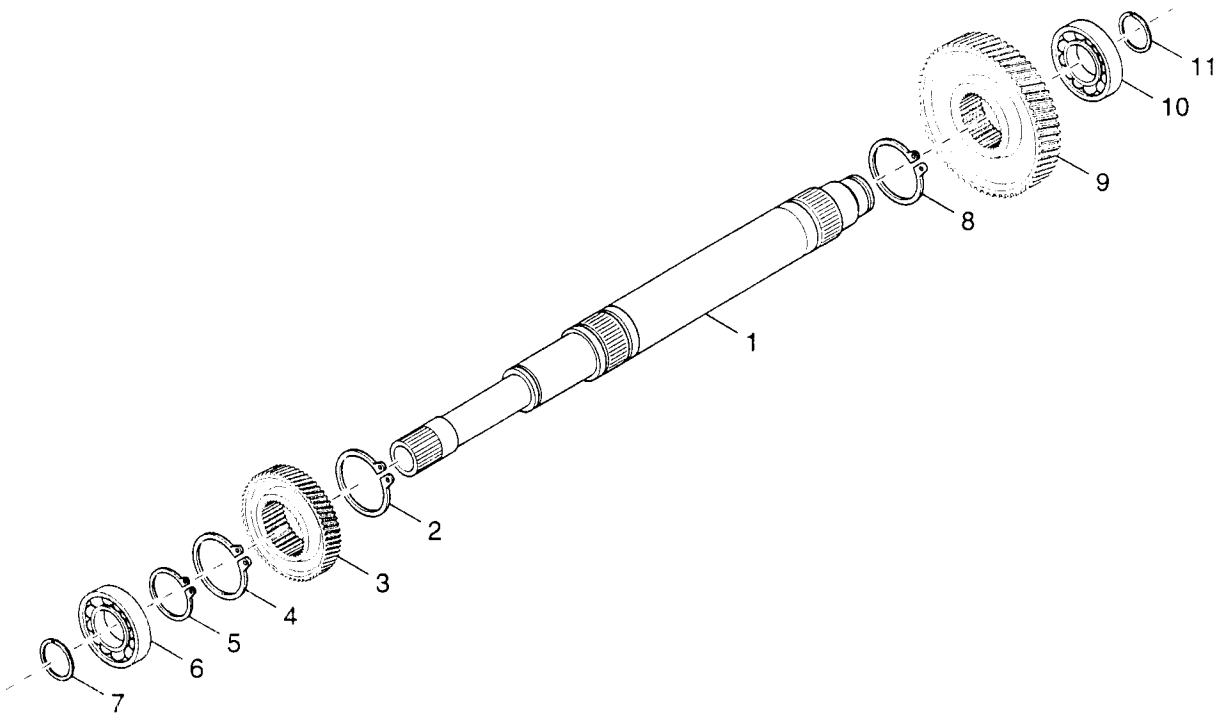

T16000

INPUT SHAFT GROUP

Item	Qty	Part Number	%	Description
1	1	4204232	E	Input Shaft
2	1	4204251		Forward Low Gear Snap Ring
3	1	4203978	E	Forward Low Gear (26T)
4	1	5JM50		Forward Low Gear Snap Ring
5	1	5JM40		Input Shaft Front Bearing Snap Ring
6	1	4204314	D	Input Shaft Front Bearing
7	1	4203872	B	Input Shaft Piston Ring
8	1	5JM50		Forward High Gear Snap Ring
9	1	4203977	E	Forward High Gear (62T)
10	1	501.0118		Input Shaft Rear Bearing
11	1	4203872		Input Shaft Piston Ring

N.S.S. – Not Sold Separately
% - Part Stock Recommendation

T16000

FWD LOW / FWD HIGH SHAFT AND GEARS GROUP

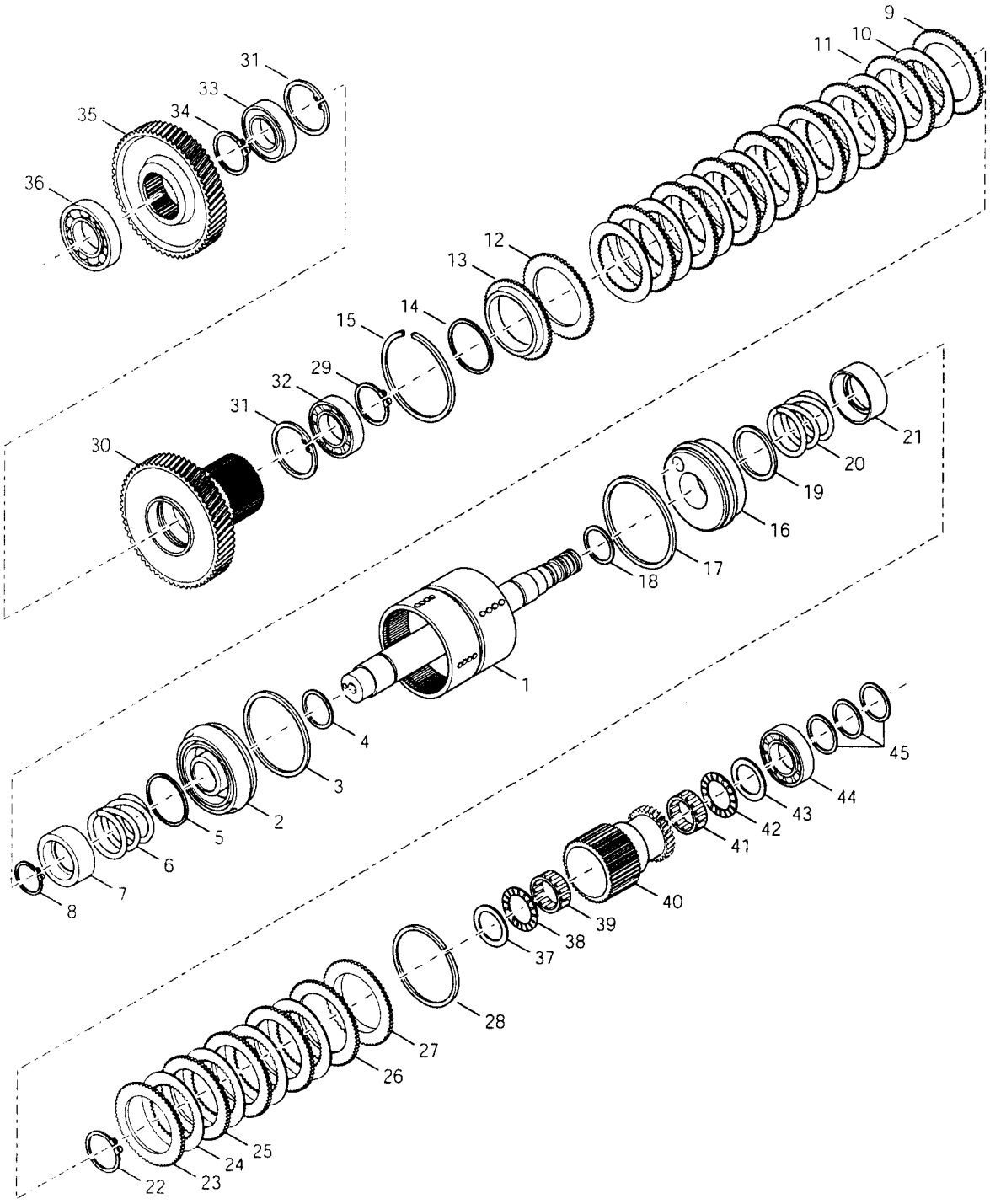

T16000

FWD LOW / FWD HIGH SHAFT AND GEARS GROUP

Item	Qty	Part Number	%	Description
1	1	4206063	E	Fwd Low / Fwd High Shaft Drum & Plug Ass'y
2	1	4203742	C	Clutch Piston & Seals Ass'y – Incl. Items 3 And 4
3	1	237032	B	Clutch Piston Outer Seal – Incl. In Item 2
4	1	234113	B	Clutch Piston Inner Seal – Incl. Item 2
5	1	4203876	D	Clutch Piston Wear Plate
6	1	4203878	D	Piston Return Spring
7	1	4203877	D	Spring Retainer
8	1	234350	B	Retainer Snap Ring
9	1	4204265	D	Clutch Outer Half Disc
10	8	4204267	D	Clutch Inner Disc
11	7	4204266	D	Clutch Outer Disc
12	1	4204265	D	Clutch Outer Half Disc
13	1	4206067	D	Assy. End Plate & Seal – Incl. Item 14
14	1	4206069	B	Backing Plate Seal – Incl. In Item 13
15	1	234111	C	Clutch Disc Backing Plate Snap Ring
16	1	4203742		Clutch Piston & Seals Ass'y. – Incl. Item 17 And 18
17	1	237032		Clutch Piston Outer Seal – Incl. In Item 16
18	1	234113		Clutch Piston Inner Seal – Incl. In Item 16
19	1	4203876		Clutch Piston Wear Plate
20	1	4203878		Piston Return Spring
21	1	4203877		Spring Retainer
22	1	234350		Retainer Snap Ring
23	1	4204265		Clutch Outer Half Disc
24	4	4204267		Clutch Inner Disc
25	3	4204266		Clutch Outer Disc
26	1	4204265		Clutch Outer Half Disc
27	1	4204253		Clutch Disc Backing Plate
28	1	234111		Clutch Disc Backing Plate Snap Ring

N.S.S. – Not Sold Separately
% - Part Stock Recommendation

Item	Qty	Part Number	%	Description
29	1	5JM50	C	Bearing Snap Ring
30	1	4206066	E	Forward Low Clutch Gear (54T)
31	2	7JM80	C	Forward Low Clutch Gear Bearing Locating Ring
32	1	230885	C	Forward Low Clutch Gear Inner Bearing
33	1	4204256	C	Forward Low Clutch Gear Outer Bearing – Shield Out
34	1	5JM50		Bearing Snap Ring
35	1	4203980	E	Forward Driven Gear (42T)
36	1	4204257	C	Fwd Low / Fwd High Shaft Front Bearing
37	1	4203946		Thrust Bearing Spacer
38	1	4203947	C	Forward High Clutch Gear Thrust Bearing
39	1	4203945	C	Forward High Clutch Gear Needle Bearing
40	1	4203985	E	Forward High Clutch Gear (34T)
41	1	4203945		Forward High Clutch Gear Needle Bearing
42	1	4203947		Forward High Clutch Gear Thrust Bearing
43	1	4203946		Thrust Bearing Spacer
44	1	237972	C	Fwd Low / Fwd High Shaft Rear Bearing
45	3	4203872	B	Fwd Low / Fwd High Shaft Piston Ring

N.S.S. – Not Sold Separately
% - Part Stock Recommendation

T16000

REVERSE / 1ST SHAFT AND GEARS GROUP

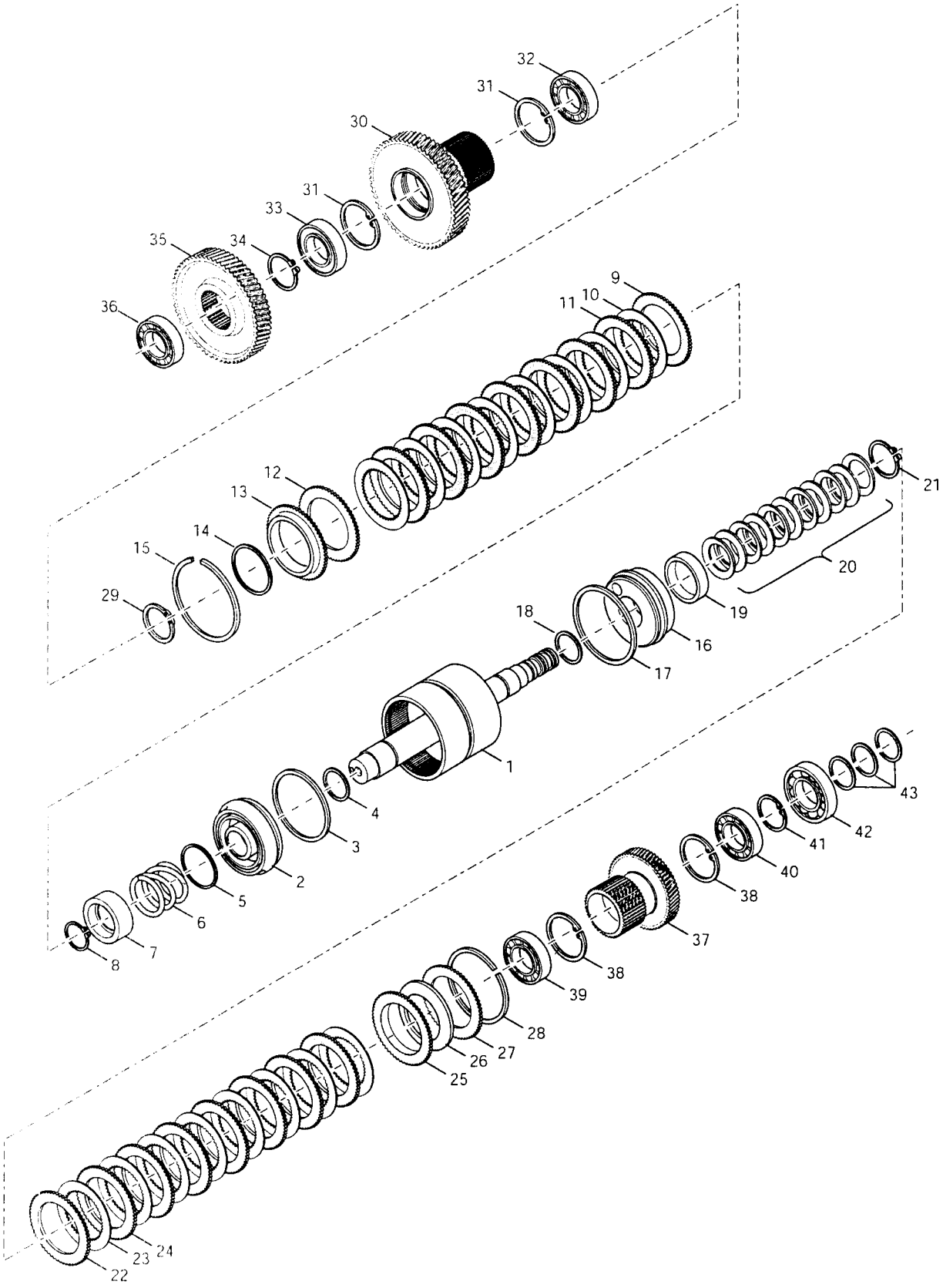

T16000

REVERSE / 1ST SHAFT AND GEARS GROUP

Item	Qty	Part Number	%	Description
1	1	4207078	E	Reverse / 1st Shaft Drum & Plug Ass'y
2	1	4203742		Clutch Piston & Seals Ass'y. – Incl. Items 3 And 4
3	1	237032		Clutch Piston Outer Seal – Incl. In Item 2
4	1	234113		Clutch Piston Inner Seal – Incl. In Item 2
5	1	4203876		Clutch Piston Wear Plate
6	1	4203878		Piston Return Spring
7	1	4203877		Spring Retainer
8	1	234350		Retainer Snap Ring
9	1	4204265		Clutch Outer Half Disc
10	8	4204267		Clutch Inner Disc
11	7	4204266		Clutch Outer Disc
12	1	4204265		Clutch Outer Half Disc
13	1	4206067		Assy. – End Plate & Seal – Incl. Item 14
14	1	4206069		Backing Plate Seal – Incl. In Item 13
15	1	234111		Clutch Disc Backing Plate Snap Ring
16	1	4203742		Clutch Piston & Seals Ass'y. – Incl. Items 17 And 18
17	1	237032		Clutch Piston Outer Seal – Incl. In Item 16
18	1	234113		Clutch Piston Inner Seal – Incl. In Item 16
19	1	4204300		Clutch Piston Wear Plate
20	1	4203887		Piston Return Spring (Bellevile Washer)
21	1	234350		Snap Ring
22	1	4204265		Clutch Outer Half Disc
23	8	4204267		Clutch Inner Disc
24	7	4204266		Clutch Outer Disc
25	1	4204265		Clutch Outer Half Disc
26	1	4203880	D	Modulation Spring
27	1	4204253		Clutch Disc Backing Plate
28	1	234111		Clutch Disc Backing Plate Snap Ring

N.S.S. – Not Sold Separately
% - Part Stock Recommendation

Item	Qty	Part Number	%	Description
29	1	5JM50		Bearing Snap Ring
30	1	4206066		Reverse Clutch Gear (54T)
31	2	7JM80		Reverse Clutch Gear Locating Ring
32	1	230885		Reverse Clutch Gear Inner Bearing
33	1	4204256		Reverse Clutch Gear Outer Bearing – Shield Out
34	1	5JM50		Bearing Snap Ring
35	1	4203981	E	Reverse Driven Gear (50T)
36	1	4204257		Reverse / 1st Shaft Front Bearing
37	1	4203986	E	1st Clutch Gear (30T)
38	2	7JM75	C	1st Clutch Gear Bearing Locating Ring
39	1	230860	C	1st Clutch Gear Inner Bearing
40	1	233390	C	1st Clutch Gear Outer Bearing – Shield out
41	1	5JM45	C	Bearing Snap Ring
42	1	4204314	C	Reverse / 1st Shaft Rear Bearing
43	3	4203872		Reverse / 1st Shaft Piston Ring

N.S.S. – Not Sold Separately
% - Part Stock Recommendation

T16000

2ND SHAFT GROUP

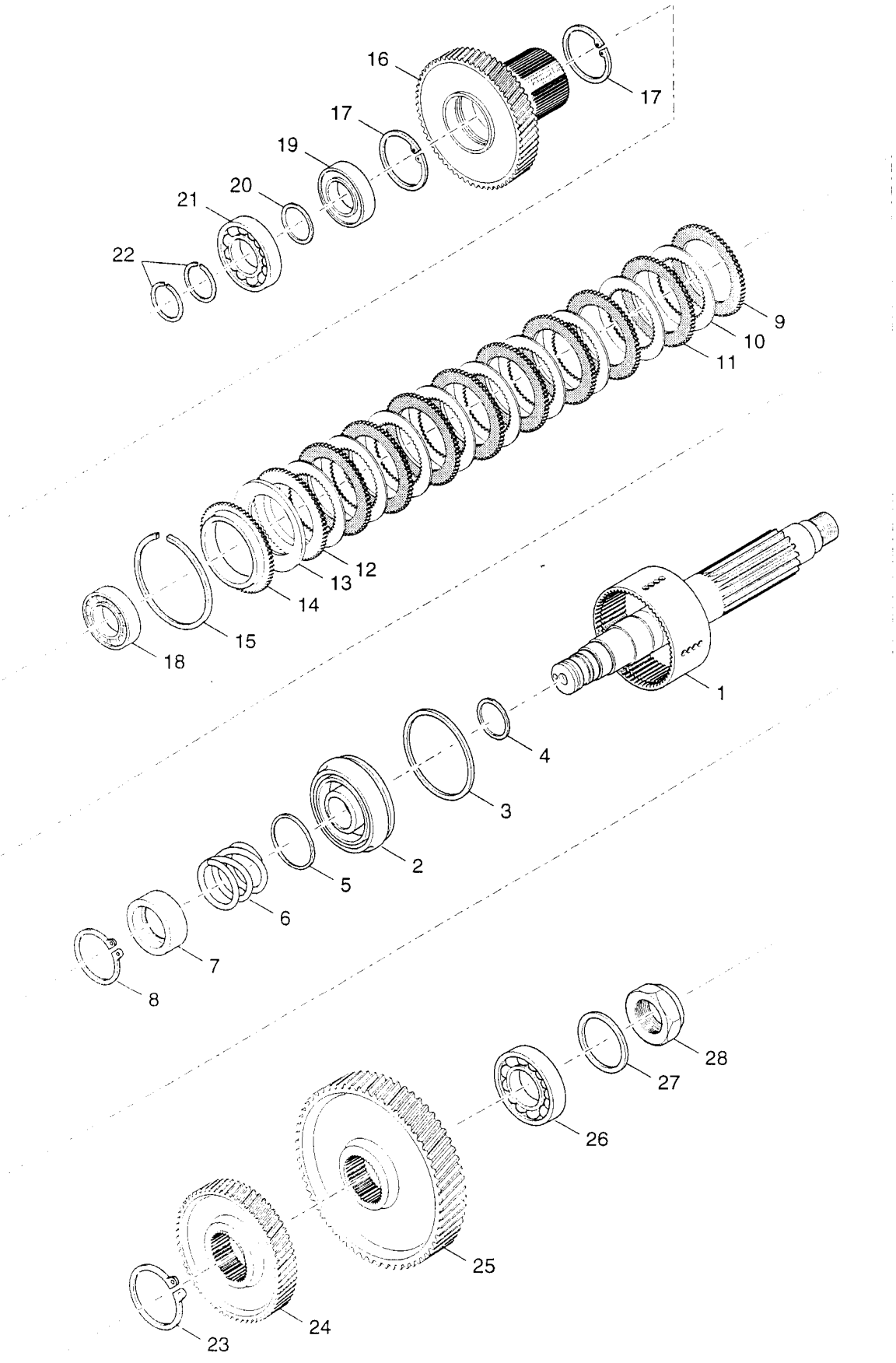

T16000

2ND SHAFT GROUP

Item	Qty	Part Number	%	Description
1	1	4204309		2nd Shaft, Hub, Drum And Plug Assembly
2	1	4203742		Clutch Piston & Seals Ass'y. – Incl. Items 3 And 4
3	1	237032		Clutch Piston Outer Seal – Incl. In Item 2
4	1	234113		Clutch Piston Inner Seal – Incl. In Item 2
5	1	4203876		Clutch Piston Wear Plate
6	1	4203878		Piston Return Spring
7	1	4203877		Spring Retainer
8	1	234350		Retainer Snap Ring
9	1	4204265		Clutch Outer Half Disc
10	8	4204267		Clutch Inner Disc
11	7	4204266		Clutch Outer Disc
12	1	4204265		Clutch Outer Half Disc
13	1	4203880		Modulation Spring
14	1	4204253		Clutch Disc Backing Plate
15	1	234111		Clutch Disc Backing Plate Snap Ring
16	1	4203984		2nd Clutch Gear (52T)
17	2	7JM75		2nd Clutch Gear Bearing Locating Ring
18	1	230860		2nd Clutch Gear Inner Bearing
19	1	233390		2nd Clutch Gear Outer Bearing – Shield Out
20	1	4203899		Bearing Support Washer
21	1	501.0118		2nd Shaft Front Bearing
22	2	4203872		2nd Shaft Piston Ring
23	1	249936	C	Gear Retainer Snap Ring
24	1	4203979	E	Lower Output Drive Gear (41T)
25	1	4203982	E	Upper Output Gear (59T)
26	1	4204258	C	2nd Shaft Rear Bearing
27	1	231916		Output Flange Washer
28	1	215634	C	Output Flange Nut

N.S.S. – Not Sold Separately
% - Part Stock Recommendation

T16000

OUTPUT SHAFT WITH INTERNAL DISCONNECT GROUP

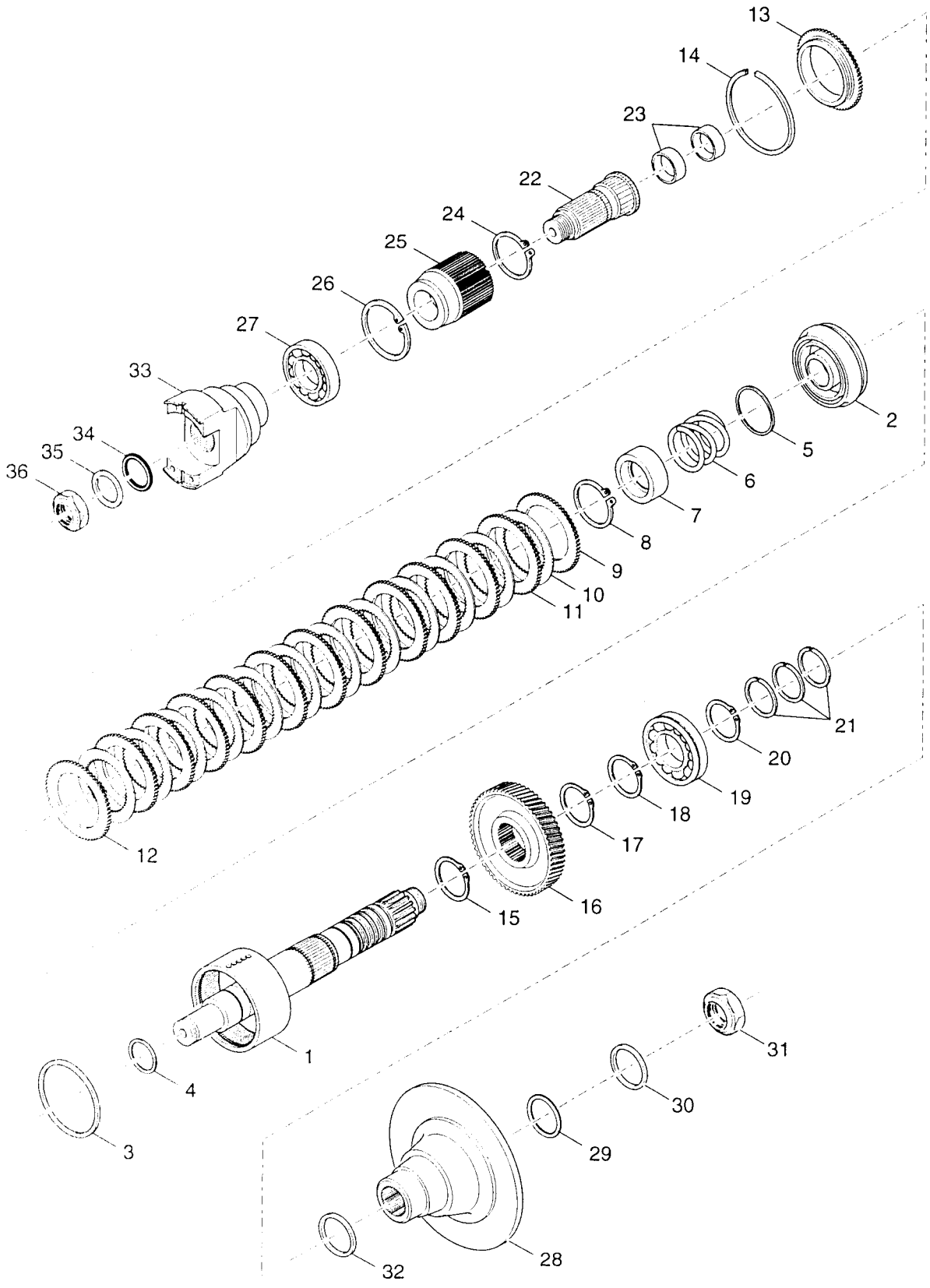

GRP-T16-95 04-98

T16000

OUTPUT SHAFT WITH INTERNAL DISCONNECT GROUP

Item	Qty	Part Number	%	Description
1	1	4206715	E	Rear Output Shaft Drum & Plug Assembly
2	1	4203742		Clutch Piston & Seals Ass'y. – Incl. Items 3 And 4
3	1	237032		Clutch Piston Outer Seal – Incl. In Item 2
4	1	234113		Clutch Piston Inner Seal – Incl. In Item 2
5	1	4203876		Clutch Piston Wear Plate
6	1	4203878		Piston Return Spring
7	1	4203877		Spring Retainer
8	1	234350		Retainer Snap Ring
9	1	4204265		Clutch Outer Half Disc
10	12	4204267		Clutch Inner Disc
11	11	4204266		Clutch Outer Disc
12	1	4204265		Clutch Outer Half Disc
13	1	4204253		Clutch Disc Backing Plate
14	1	234111		Clutch Disc Backing Plate Snap Ring
15	1	5JM65	C	Gear Retainer Snap Ring
16	1	4203983		Lower Output Gear (39T)
17	1	5JM65		Gear Retainer Ring
18	1	5JM60		Gear Retainer Ring
19	1	4204260		Output Shaft Rear Bearing
20	1	5JM60		Output Shaft Rear Bearing Snap Ring
21	3	4203898		Output Shaft Piston Ring
22	1	4204261	E	Front Output Shaft Assembly – Incl. Item 24
23	2	4205018	C	Output Shaft Bushing – Incl. In Item 23
24	1	249936		Gear Retainer Snap Ring
25	1	4203988		Disconnect Hub
26	1	7JM100	C	Retainer Ring
27	1	225874	C	Output Shaft Front Bearing
28	1	4203851	E	Rear Output Flange (Yoke 1410 W/Brake)

N.S.S. – Not Sold Separately
% - Part Stock Recommendation

Item	Qty	Part Number	%	Description
29	1	25K60128	B	Output Flange "O" Ring
30	1	231916		Output Flange Washer
31	1	215634		Output Flange Nut
32	1	4204282		Output Flange Spacer
33	1	4203852	E	Front Output Flange (Yoke 1410 W/O Brake)
34	1	25K60128		Output Flange "O" Ring
35	1	231916		Output Flange Washer
36	1	215634		Output Flange Nut

N.S.S. – Not Sold Separately
% - Part Stock Recommendation

T16000

CONTROL VALVE MOUNTING GROUP

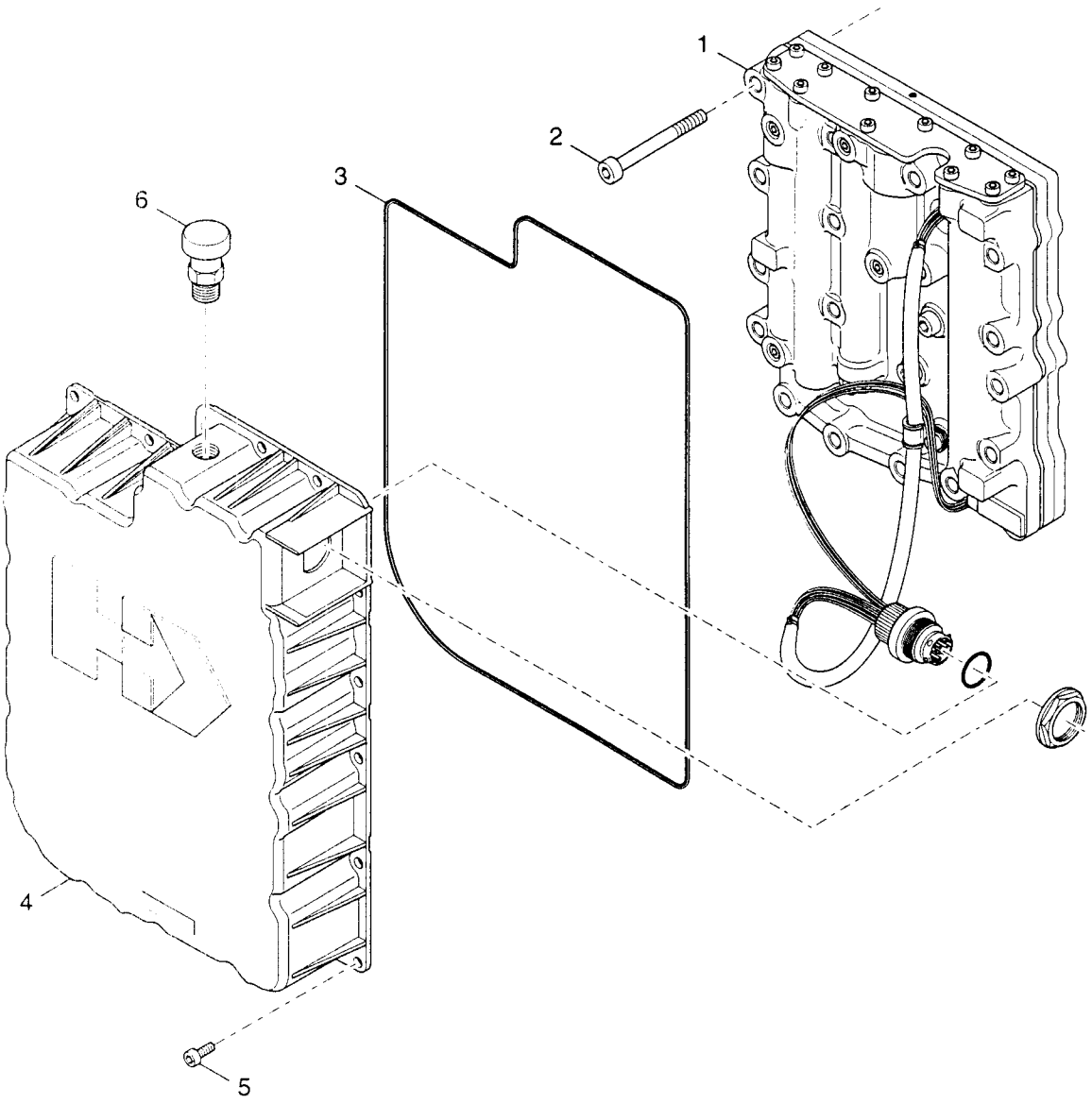

GRP-T16-122 01-97

T16000

CONTROL VALVE MOUNTING GROUP

Item	Qty	Part Number	%	Description
1	1	4205806	E	Control Valve Assembly
2	17	1GM865		Control Valve Mounting Screw
3	1	4203922	B	Control Valve Protection Cover Seal
4	1	4204264		Control Valve Protection Cover Assembly – Incl. Item 6
5	9	1GM612		Protection Cover Screw
6	1	238535	D	Air Breather – Part Of Item 4

N.S.S. – Not Sold Separately
% - Part Stock Recommendation

T16000

CONTROL VALVE ASSEMBLY

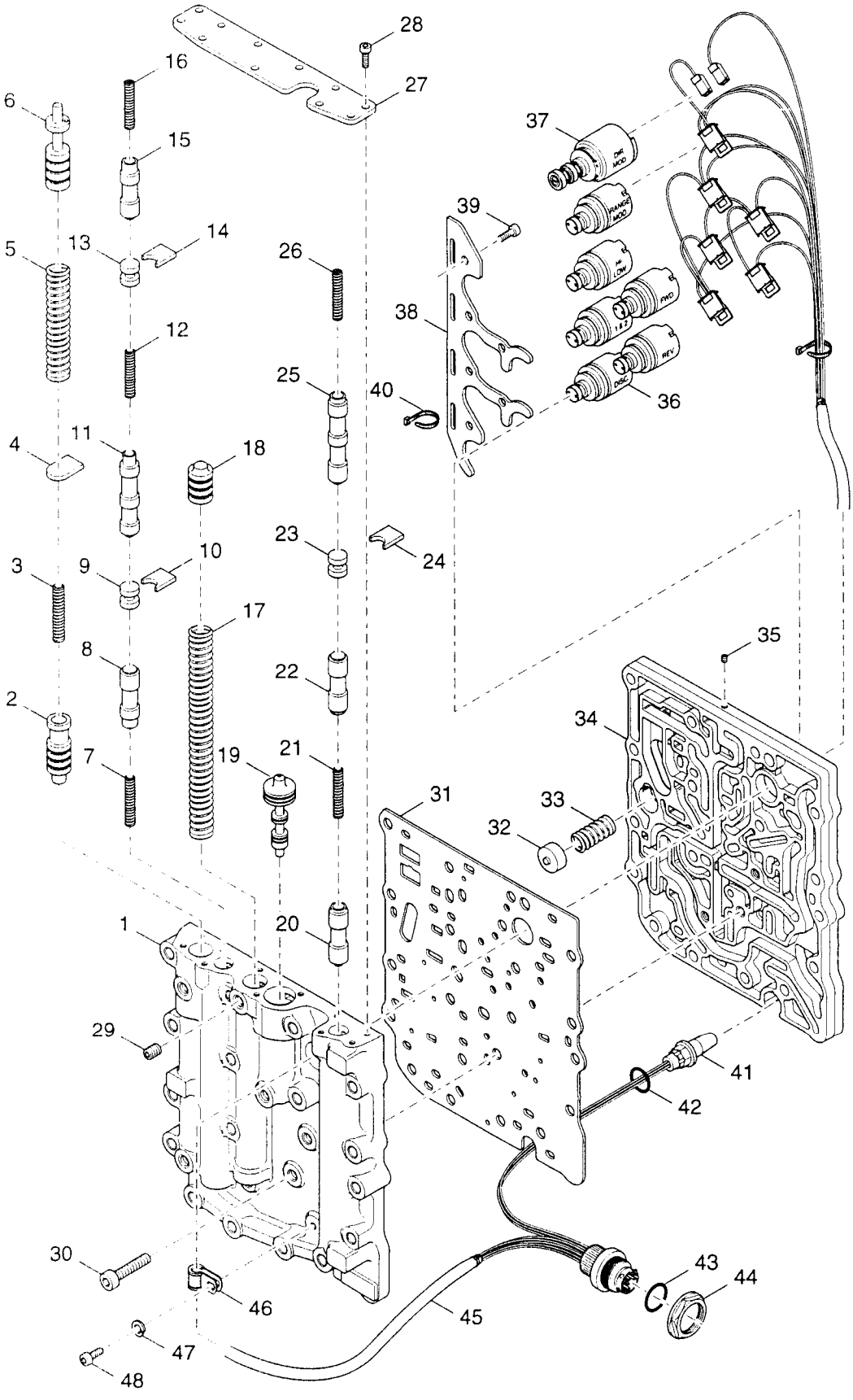

GRP-T16-131 11-96

SPICER OFF-HIGHWAY

Date: 15.03.99
Revised :
MODEL : 4205806 GROUP

T16000

CONTROL VALVE ASSEMBLY

Item	Qty	Part Number	%	Description
1	1	N.S.S.		Spool Body
2	1	N.S.S.		Pressure Reducer Spool
3	1	N.S.S.		Pressure Reducer Spring
4	1	N.S.S.		Separater Plate
5	1	N.S.S.		Pressure Regulator Spring
6	1	N.S.S.		Pressure Regulator Spool
7	1	N.S.S.		Pilot Spool Spring
8	1	N.S.S.		Disconnect Spool
9	1	N.S.S.		Spool Stop
10	1	N.S.S.		Separater Plate
11	1	N.S.S.		1st / 2nd Spool
12	1	N.S.S.		Pilot Spool Spring
13	1	N.S.S.		Spool Stop
14	1	N.S.S.		Separater Plate
15	1	N.S.S.		Range Modulation Spool
16	1	N.S.S.		Pilot Spool Spring
17	1	N.S.S.		Accumulator Spring
18	1	N.S.S.		Accumulator Spool
19	1	N.S.S.		Booster Spool
20	1	N.S.S.		Reverse Spool
21	1	N.S.S.		Pilot Spool Spring
22	1	N.S.S.		Forward Spool
23	1	N.S.S.		Spool Stop
24	1	N.S.S.		Separater Plate
25	1	N.S.S.		Fwd. Low / Fwd. High. Spool
26	1	N.S.S.		Pilot Spool Spring
27	1	N.S.S.		Spool Cover
28	11	1GM512		Spool Cover Screw

N.S.S. – Not Sold Separately
% - Part Stock Recommendation

Item	Qty	Part Number	%	Description
29	2	239244		Check Port Plugs
30	3	1GM830		Spool Body To Solenoid Plate Screw
31	1	N.S.S.		Spacer Plate
32	1	4203943		Bypass Valve Spool
33	1	4203944		Bypass Valve Spring
34	1	N.S.S.		Solenoid Plate
35	6	4203975		Plug
36	6	4203147		Solenoid
37	1	4203146		Electronic Controled Modulation Valve
38	1	N.S.S.		Solenoid Clamp
39	6	1GM512		Solenoid Clamp Screw
40	6	4202198		Wiring Strap
41	1	4205804		Speed Sensor
42	1	60K30022	B	Speed Sensor "O" Ring
43	1	60K40030	B	Jam Nut "O" Ring
44	1	N.S.S.		Jam Nut
45	1	4205805		Wiring Harness, "O" Rings, Jam Nut And Speed Sensor Ass'y. Incl. Items 41, 42, 43 And 44
46	1	4203974		Wiring Clamp
47	1	1EM50		Clamp Screw LockWasher
48	1	1GM510		Clamp Screw
49	1	4205806		Control Valve Assembly – Including Items 1 Thru 48

N.S.S. – Not Sold Separately
% - Part Stock Recommendation

T16000

DRIVE PLATE GROUP

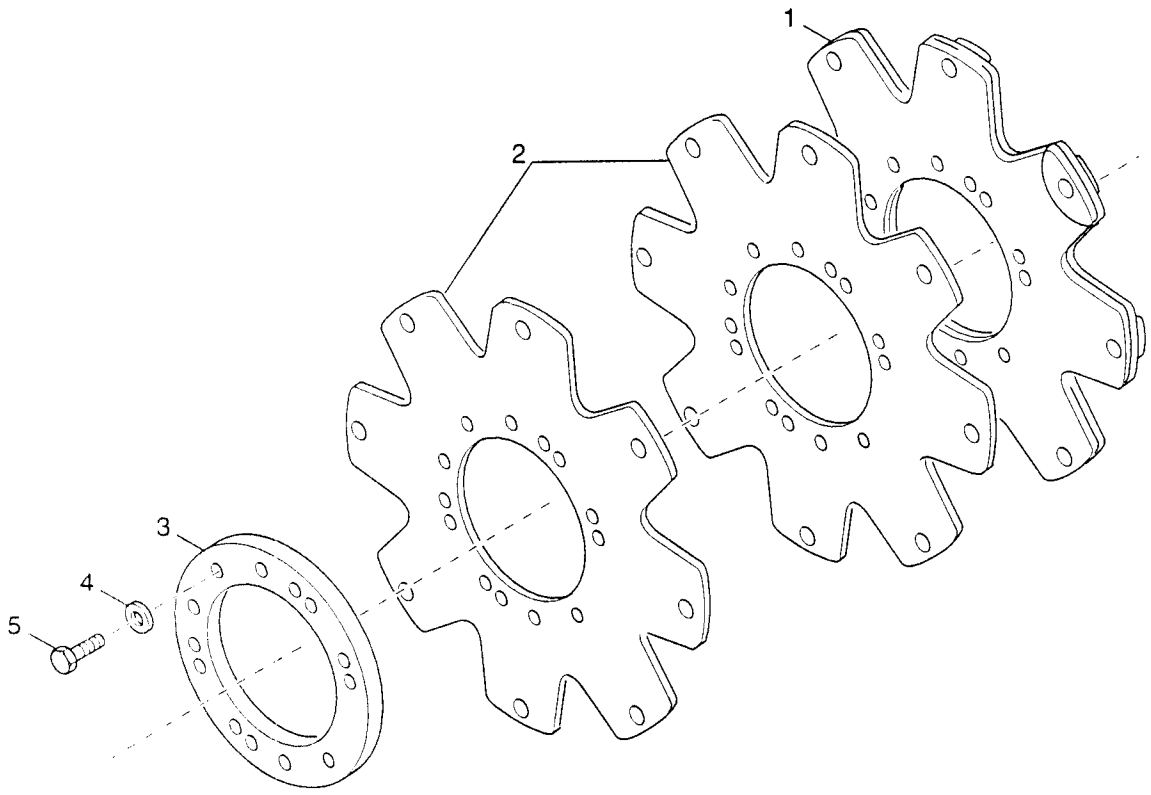

T16000

DRIVE PLATE GROUP

Item	Qty	Part N°	%	Description
1	1	N.S.S.	D	Drive Plate Assembly – Including In Item 6
2	2	N.S.S.		Drive Plate – Including In Item 6
3	1	246615	B	Drive Plate Backing Ring
4	6	4E6		Drive Plate Mounting Screw Lockwasher
5	6	2C608		Drive Plate Mounting Screw
6	1	814987	D	Drive Plate Assembly Kit – Including Item 1 Thru 5

N.S.S. – Not Sold Separately
% - Part Stock Recommendation

T16000

PARKING BRAKE GROUP

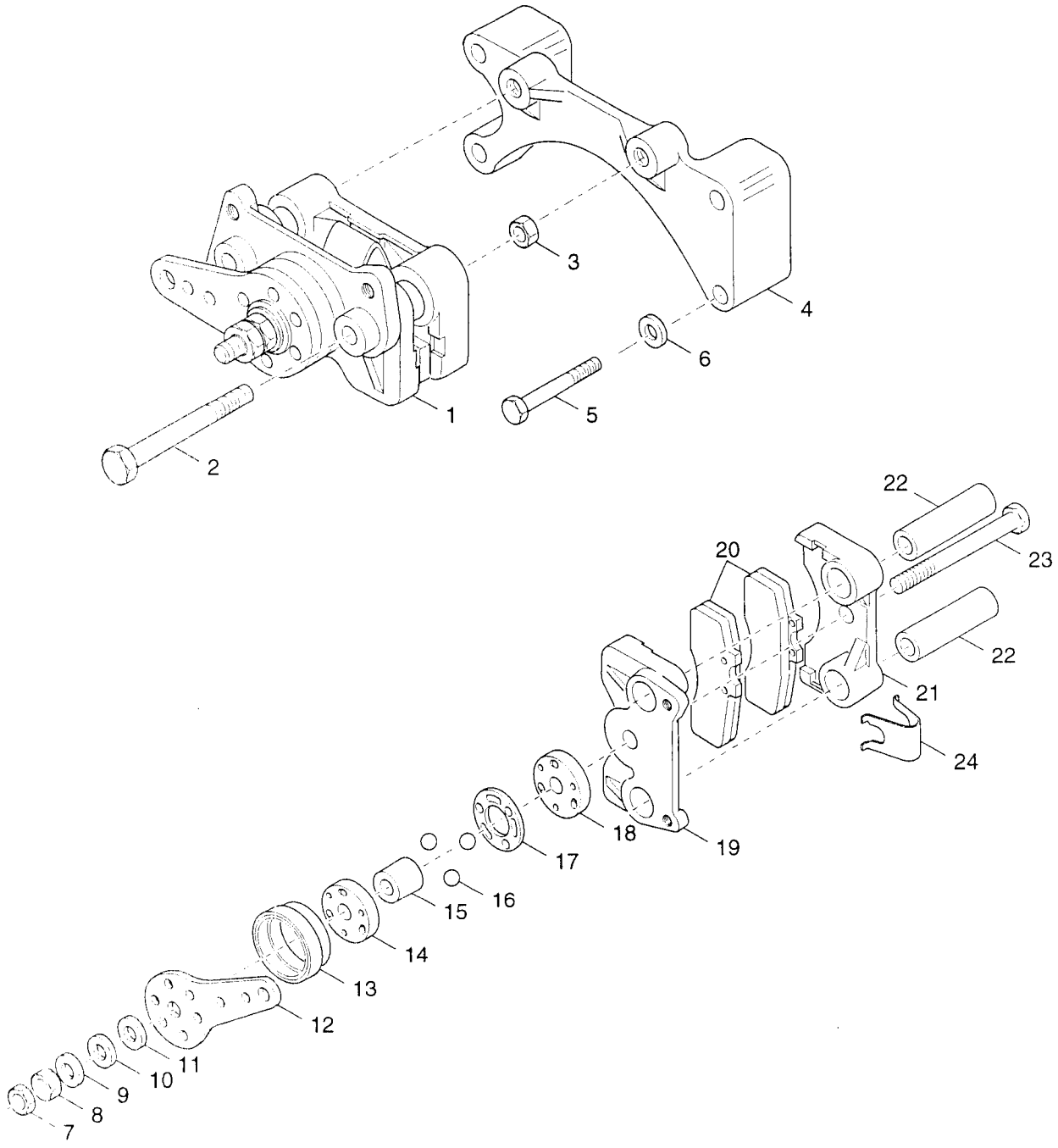

GRP-T16-102 01-98

T16000

PARKING BRAKE GROUP

Item	Qty	Part Number	%	Description
1	1	4205399	E	Parking Brake Assembly – Incl. Items 7 Thru 24 & 27
2	2	17C872		Parking Brake Mounting Screw
3	2	63D8		Parking Brake Mounting Screw Nut
4	1	4204315		Brake Mounting Plate
5	4	7CM1670		Brake Mounting Plate Screw
6	4	8EM160		Brake Mounting Plate Screw Lockwasher
7	1	4203438	D	Jam Adjusting Nut
8	1	4203437		Adjustment Nut
9	1	4203436		Hardened Washer
10	1	4203435		Stainless Steel Washer
11	1	N.S.S.		Thrust Washer – See Item 26
12	1	4203434	E	Lever
13	1	N.S.S.		Boot – See Item 26
14	1	4203431	D	Cam
15	1	N.S.S.		Id Seal – See Item 26
16	3	4203433		Ball
17	1	4203432	D	Plastic Retainer
18	1	4203431		Cam
19	1	N.S.S.		Front Torque Plate – Part Of Item 1
20	2	N.S.S.		Carrier And Lining Assembly – See Item 25 Or 26
21	1	N.S.S.		Rear Torque Plate – Part Of Item 1
22	2	4203429		Mounting Sleeve
23	1	4203430	D	Adjusting Bolt
24	1	N.S.S.		Spring – See Item 25 Or 26
25	1	4203440	C	Brake Assembly Lining Kit – Incl. Items 20 And 24
26	1	4203439	D	Hardware Parts Kit – Incl. Items 11, 13, 15 And 25
27	1	4205462	C	Seal – Sleeve - Not Illustrated

N.S.S. – Not Sold Separately
% - Part Stock Recommendation